EntreMatic Swing Door Operator
EMSW
USER'S MANUAL

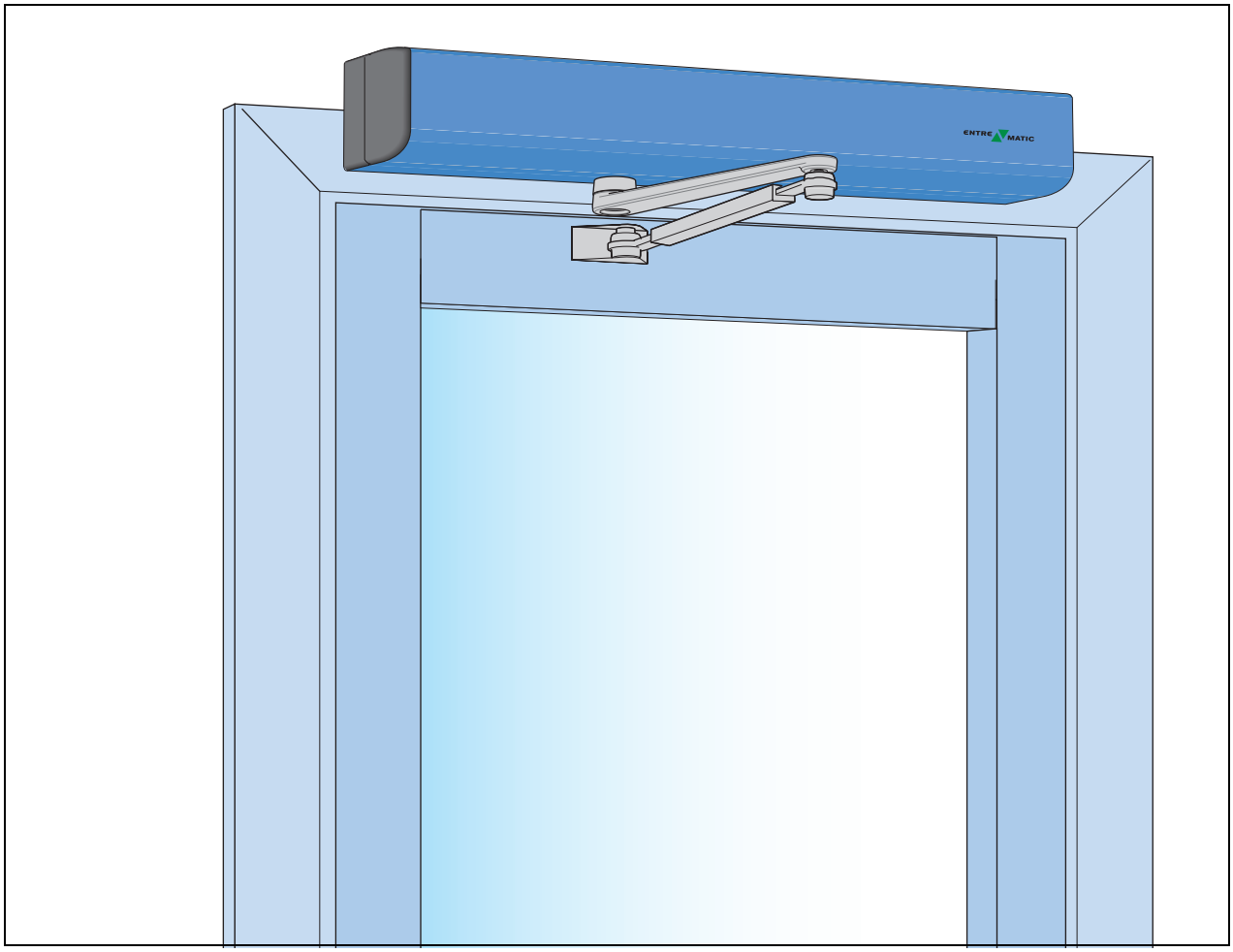

ENTRE MATIC

FAA077A2EMEI

IIssued 2006-08-15

© All rights in and to this material are the sole property of ASSA ABLOY Entrance Systems AB. Copying, scanning, alterations or modifications are expressly forbidden without the prior written consent of applicable company within ASSA ABLOY Entrance Systems AB.

Table of content:

1. Important information 4
2. Service. 5
3. Locks 6
3.1 Doors 6
3.2 Unlocking 6
3.3 Door stop 6
4. Operation 7
4.1 Programme selector PS-2 (key) 7
4.2 Programme selector PS-3A 7
5. Safety 8
5.1 Safety functions integrated in the operator. 8
5.2 Safety functions with sensors. 9
6. Troubleshooting 10
7. Replacement of fuses. 11
7.1 Removing the cover 11
7.2 Replacement of fuses 11
8. Accessories 12

1.0 Important information

Important notice!

To avoid bodily injury, material damage and malfunction of the product, the instructions contained in this manual must be strictly observed.

Note!

Instructions, design, specifications and illustrations which are contained in this manual are not binding. Rights reserved for changes without previous notice.

Environment

This operator may be equipped with batteries containing materials which are hazardous to the environment. Remove the batteries from the operator before it is scrapped. The batteries must be disposed of safely.

2.0 Service

When your operator needs to be serviced, contact the nearest authorized EntreMatic service centre.

Place for telephone number, stamp, sticker or the like.

3.0 Locks

3.1 Doors

Normally the doors and mechanical locks are manufactured by other suppliers.

3.2 Unlocking

Unlock all the mechanical locks before switching on the operator. Note that more than one lock may be fitted.

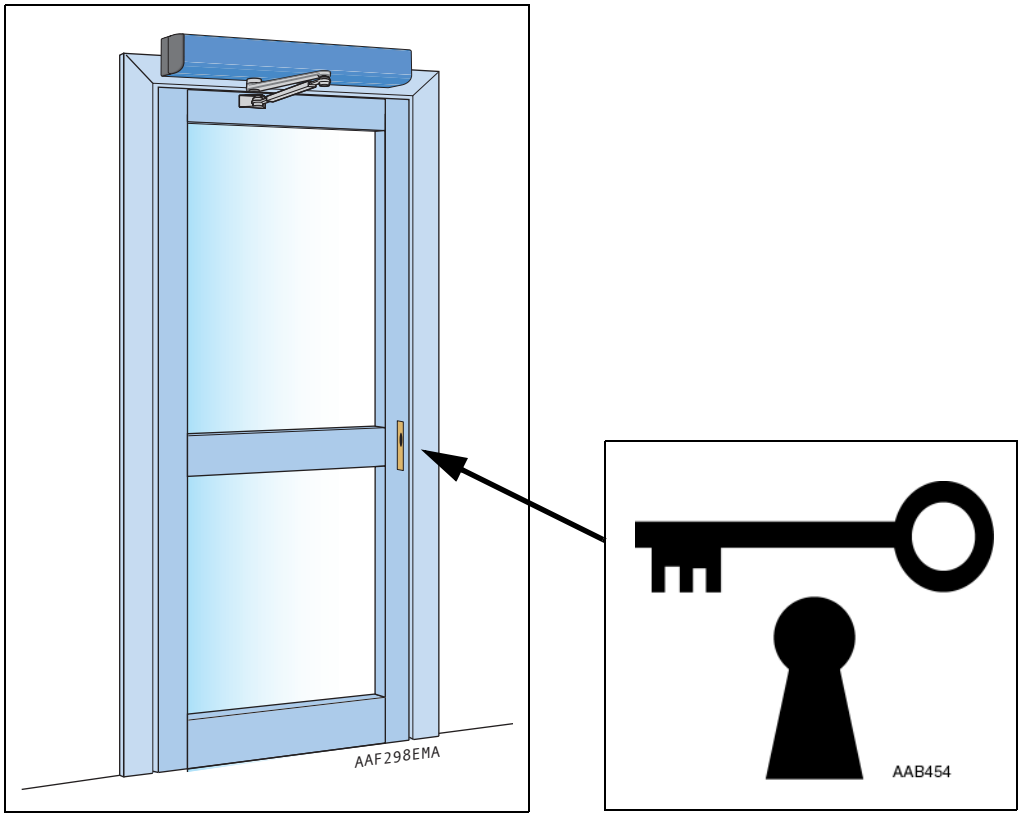

3.3 Door stop

A door stop is always recommended in open position to avoid damages on the door leaf.

4.0 Operation

The swing door operators can be equipped with different programme selectors to control the door operation.

The programme selectors PS-2 can be both flush and surface mounted.

The PS-3A, can only be flush mounted in the end plate.

4.1 Programme selector PS-2 (key)

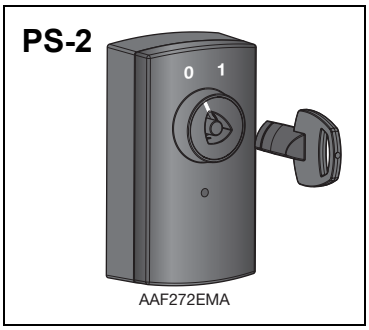

PS-2 in position	“1”	The door opens by means of the motor and is held permanently open.
PS-2 in position	“0”	The permanent hold open function is disconnected and the door closes after the pre-set time delay. The door can be opened with the inner and outer activation units and with key impulse.

4.2 Programme selector PS-3A

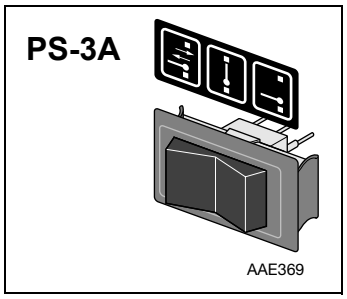

	“Auto”	Normal position. The door can be opened with the activation units. The electric striking plate, if fitted, is locked.
	“Off”	The door is closed. The outer activation units are disconnected. The electric striking plate, if fitted, is locked. The door can only be opened with key impulse.
	“Open”	The door is held permanently open.

5.0 Safety

5.1 Safety functions integrated in the operator

Opening

A door that is obstructed during the opening movement will try to open until the hold open time has elapsed and then close.

Closing

A door that is obstructed during the closing movement will stop. When the obstruction is removed the door will continue to close.

5.2 Safety functions with sensors

The EntreMatic active infra-red presence and activation sensor improves the safety for the traffic around and through the automatic swing door. It makes sure that the door is opened automatically, but at the same time it inhibits unwanted movement of the door. The sensor prohibits the door from opening if an obstacle is detected in the zone A or closing if an obstacle is detected in the zone B. If an obstacle is detected during door opening, the door ceases its motion. If an obstacle is detected during door closing, the door will reopen. The sensor detects presence, also stationary objects in the zone are detected.

The examples below show an installation with sensors on both sides of the door, but the sensor can also be installed on one side only.

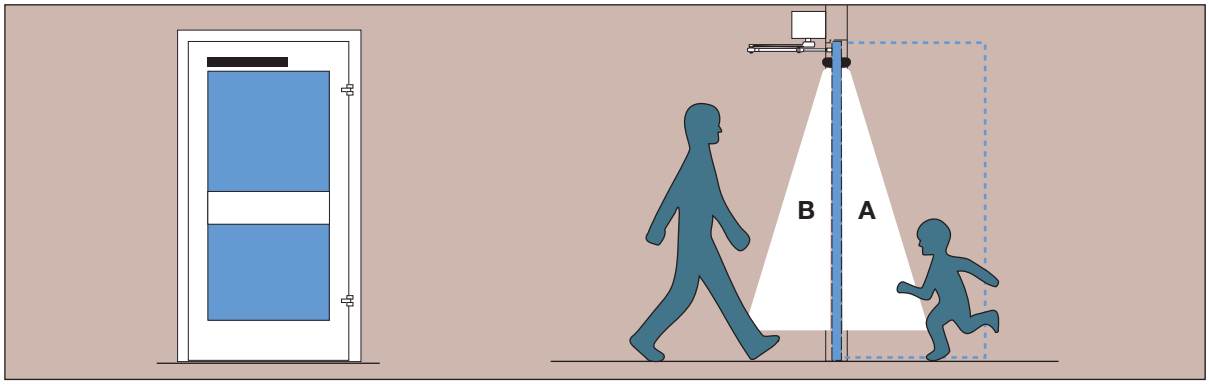

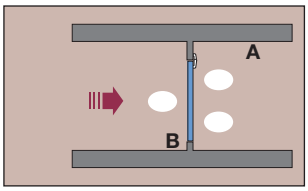

Closed door

The unit on the B side, working as an activation unit, gives a signal to the operator to open the door if a person or object enters the detection zone B.

The unit on the A side, working as a presence detection unit, prevents the door from opening if an obstacle is present in the detection zone A.

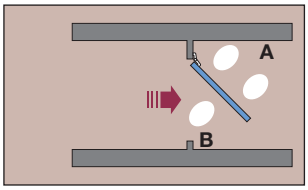

Opening and closing door

During the closing cycle the unit on the B side is working as a presence impulse unit. If a person or an object is detected within the zone B a signal is generated to the door operator to reopen the door. The unit on the A side, prevents the door from reopening if a person or an object is detected within the zone A.

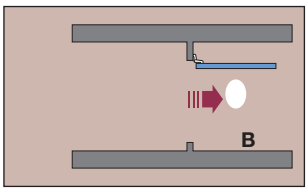

Open door

The detection zone A has been disconnected to prohibit activation by the wall. The unit on the B side is now working as a presence impulse unit. If anyone stops in front of the open door closing is prevented.

6.0 Troubleshooting

What's wrong	Remedies
The door does not open –The motor does not start	Change the setting of the programme selector. (See page 7) Check that there are no objects in the detection zone A, if a sensor is fitted. (See page 9) Check the mains switch. Check the fuses and replace if necessary. (See page 11)
–The motor starts but stops during opening	Unlock the mechanical locks. (See page 6) Check that nothing is jammed beneath the door.
The door does not close	Change the setting of the programme selector. (See page 7) If presence photocells are fitted, clean the protecting covers. Check that there are no objects in the detection zone B, if a sensor is fitted. (See page 9) Check that nothing is jammed beneath the door.
The door does not close continuously	Check that there are no moving objects within 1-1,5 m from the door if any automatic activation unit is fitted.

7.0 Replacement of fuses

7.1 Removing the cover

1 Disconnect the mains power.
2 Remove the fastening screw (1) at the underside of the cover.
3 The cover is slid over flanges in the end plates (3). Grab around the cover and pull outwards.

Note! To obtain sufficient earthing between the mounting plate and the cover, the toothed washer (2) must always be used when the cover is replaced.

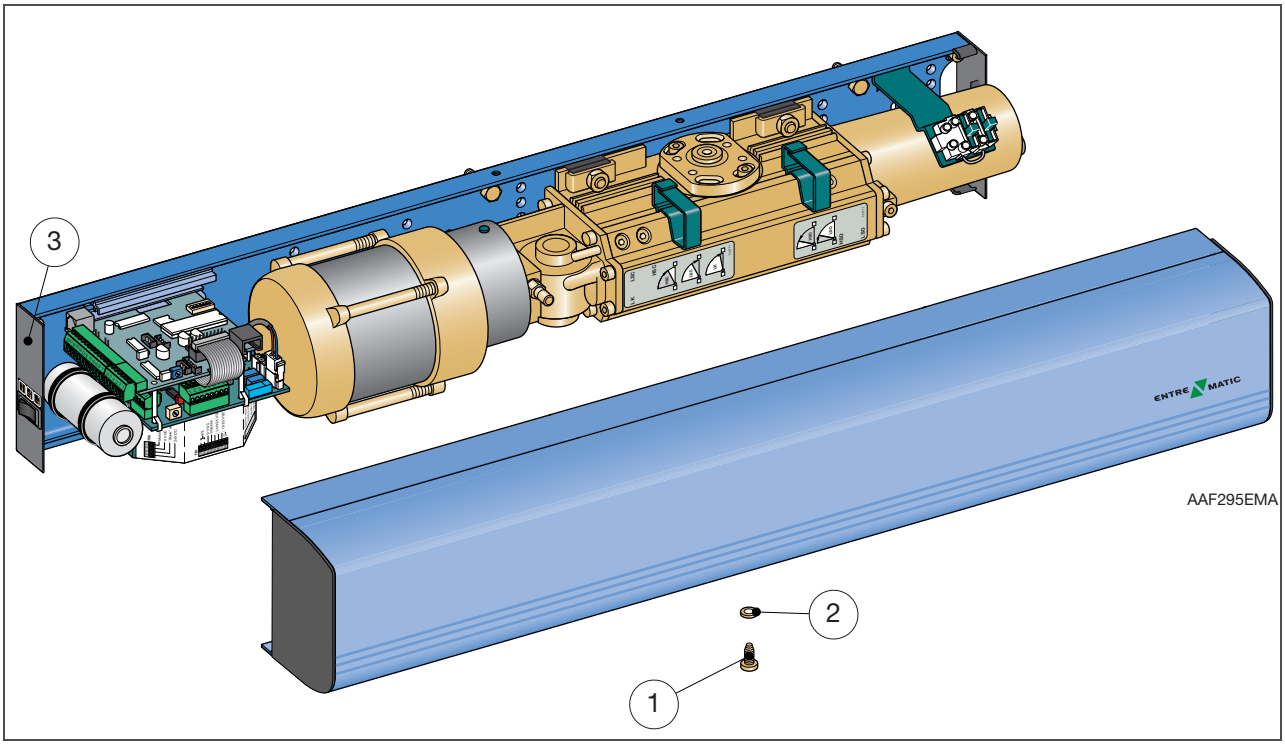

7.2 Replacement of fuses

1 Replace only with the same type and rating of fuse.

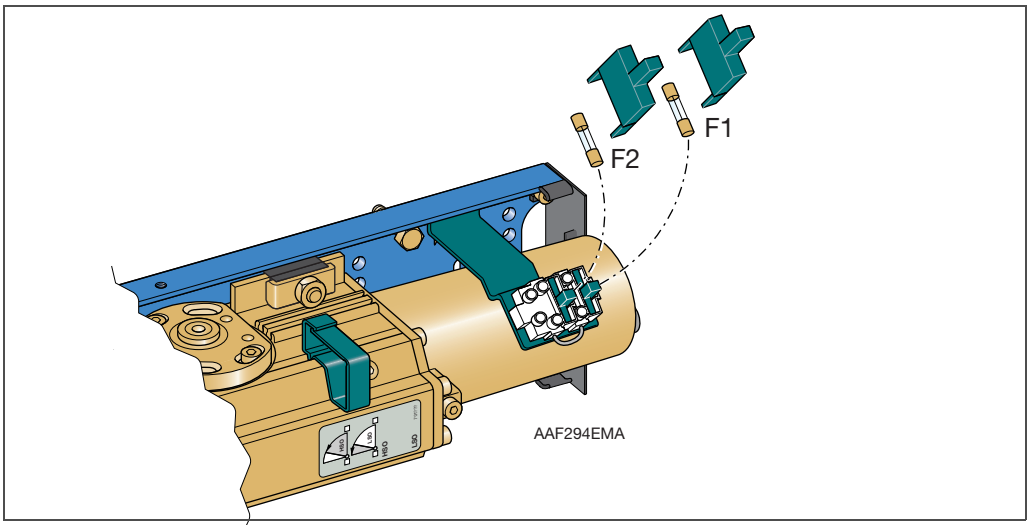

8.0 Accessories

The EntreMatic swing door operators can be equipped with a wide range of standard or optional equipment, some of them stated below. If you wish to upgrade your operator, or add some extra equipment, contact your EntreMatic representative.

Programme selectors	(See page 7)
Radar activators	Fitted above the opening on one or both sides of the door so the door opens on approach.
Impulse and presence detection sensors	(See page 8)
Electric striking plate (lock)	Controlled by the control unit (by others).
Coordination unit, COOA	Ensures that rebated doors closes in correct order.
Door stop	To prevent door from extending beyond 90 degrees.

EntreMatic AB, Box 669, SE-261 25 Landskrona, Tel: +46 418 514 50, Fax: +46 418 511 63, E-mail: info@entrematic.se